NOTES:

DRAWING TOLERANCE OF +10mm TO -10mm
PIPE FITTINGS MAY VARY

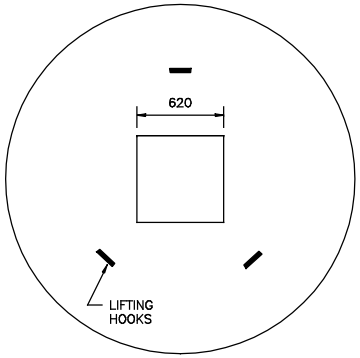

PLAN SECTION A–A
SCALE: NTS

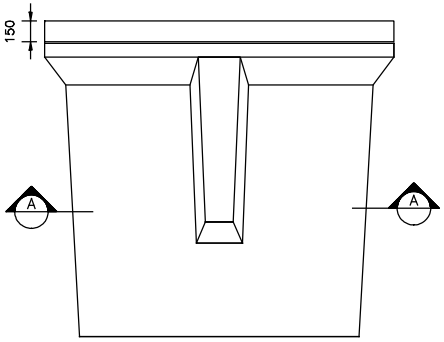

ELEVATION
SCALE: NTS

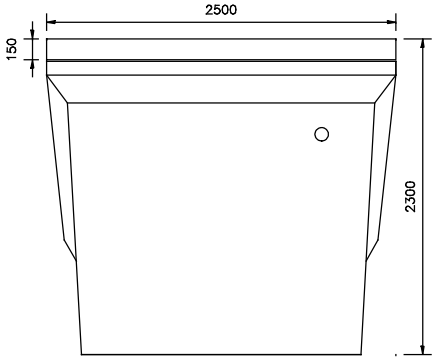

ELEVATION
SCALE: NTS

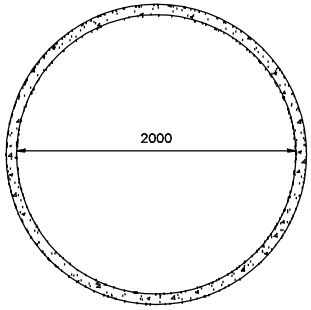

PLAN SECTION A–A
SCALE: NTS

Rev	Description	By	Date

WWW.ARMSTRONGSEPTICTANKS.IE
COPYRIGHT: ARMSTRONG TANKS

client / job description:

drawing title: CIRCULAR TREATMENT TANK 1,400 GALLON (6,360 LITRES)

scale:

date:

drawn by:

checked by:

drawing no:

GARRACLOON, CLOGHANS, BALLINA, Co MAYO
TEL: 086 7873724 EMAIL: ARMSTRONGTANKS@GMAIL.COM